WESTERBEKE™
Engines & Generators

ILLUSTRATED PARTS LIST

FOR MODELS

7.5 MCGB (60HZ) AND 6.2 MCGB (50HZ)
5.0 MCGB (60HZ) AND 4.2 MCGB (50HZ)
INCLUDING VENCLOSURE MODELS

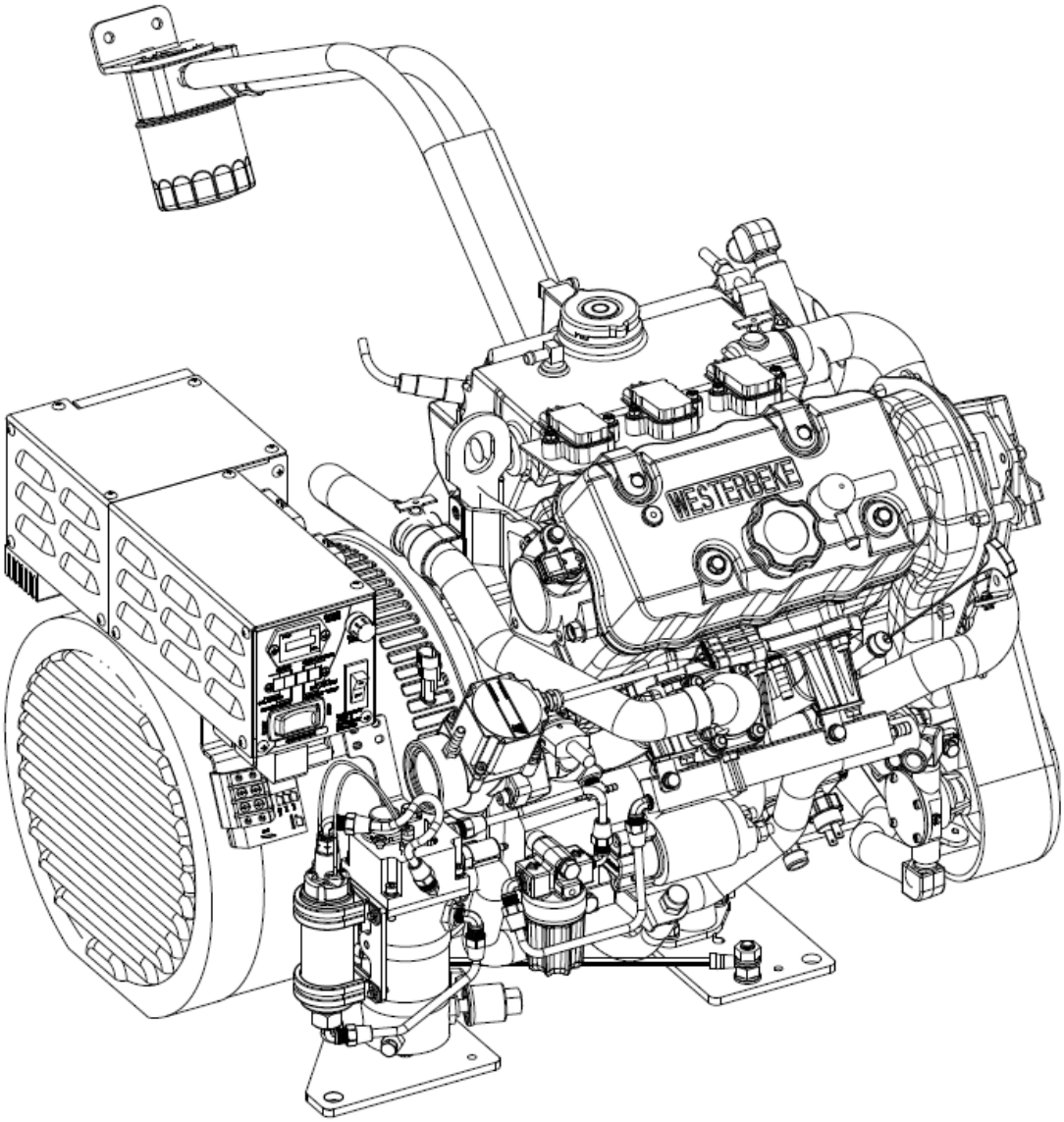

WESTERBEKE CORPORATION 150 JOHN HANCOCK ROAD, TAUNTON MA 02780
TEL: 508-823-7677, FAX: 508-884-9688, WEB: WWW.WESTERBEKE.COM

Form Number
58106 rev A

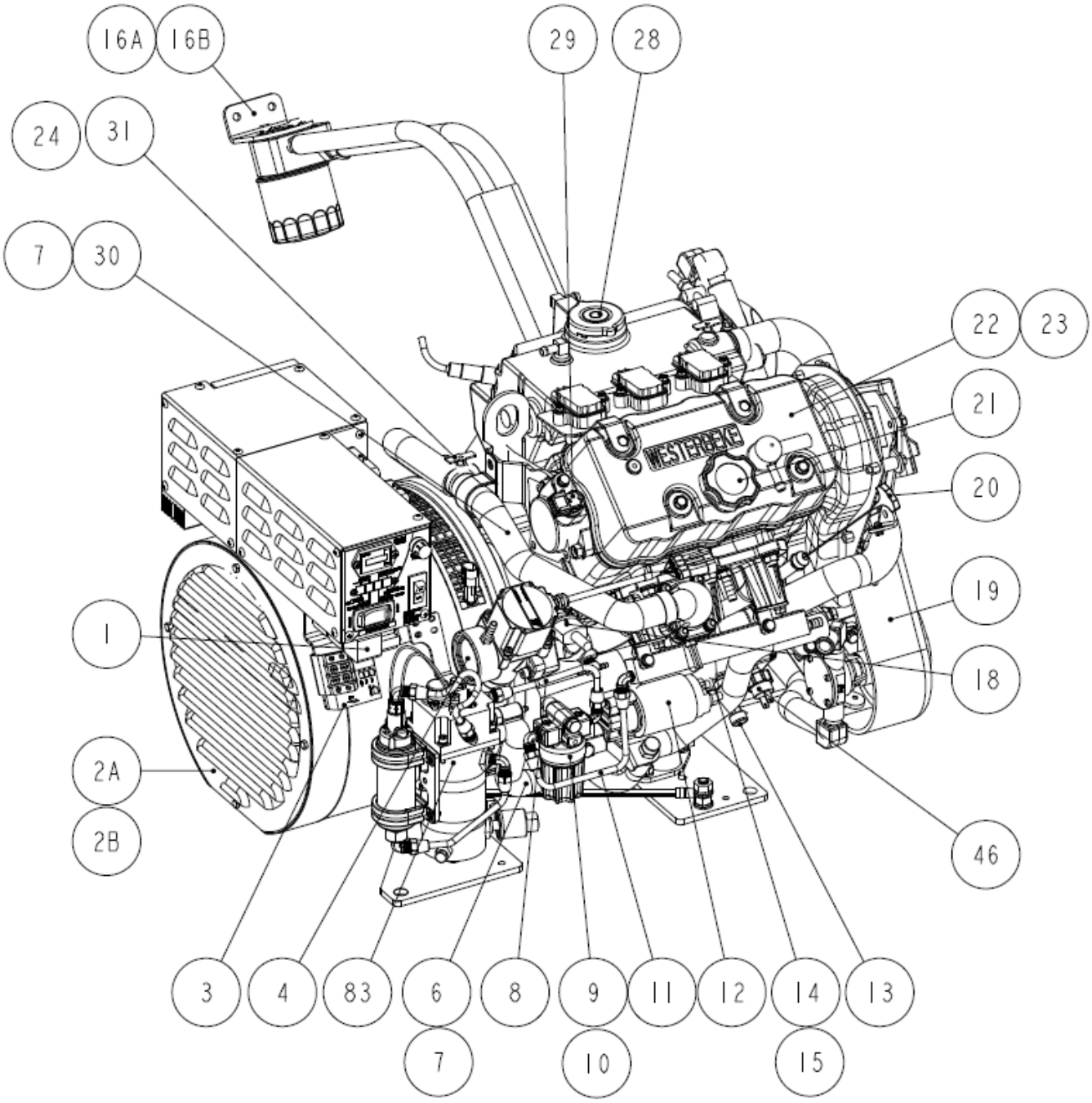

SERVICE SIDE VIEW (LEFT)

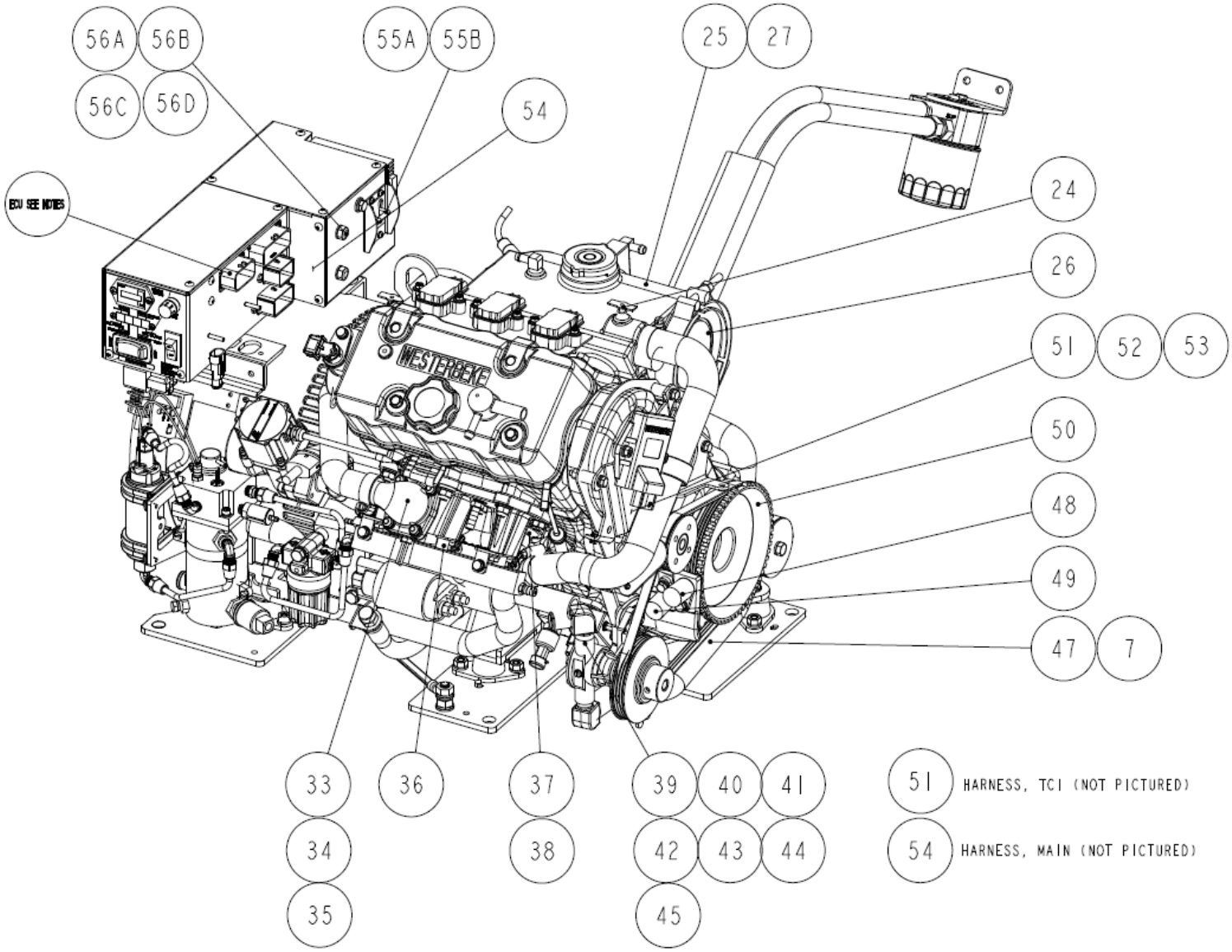

SERVICE SIDE VIEW (RIGHT)

CONTACT SERVICE OR SPARE PARTS REPRESENTATIVE
FOR ECU REPLACEMENT, GENSET SERIAL NUMBER IS REQUIRED

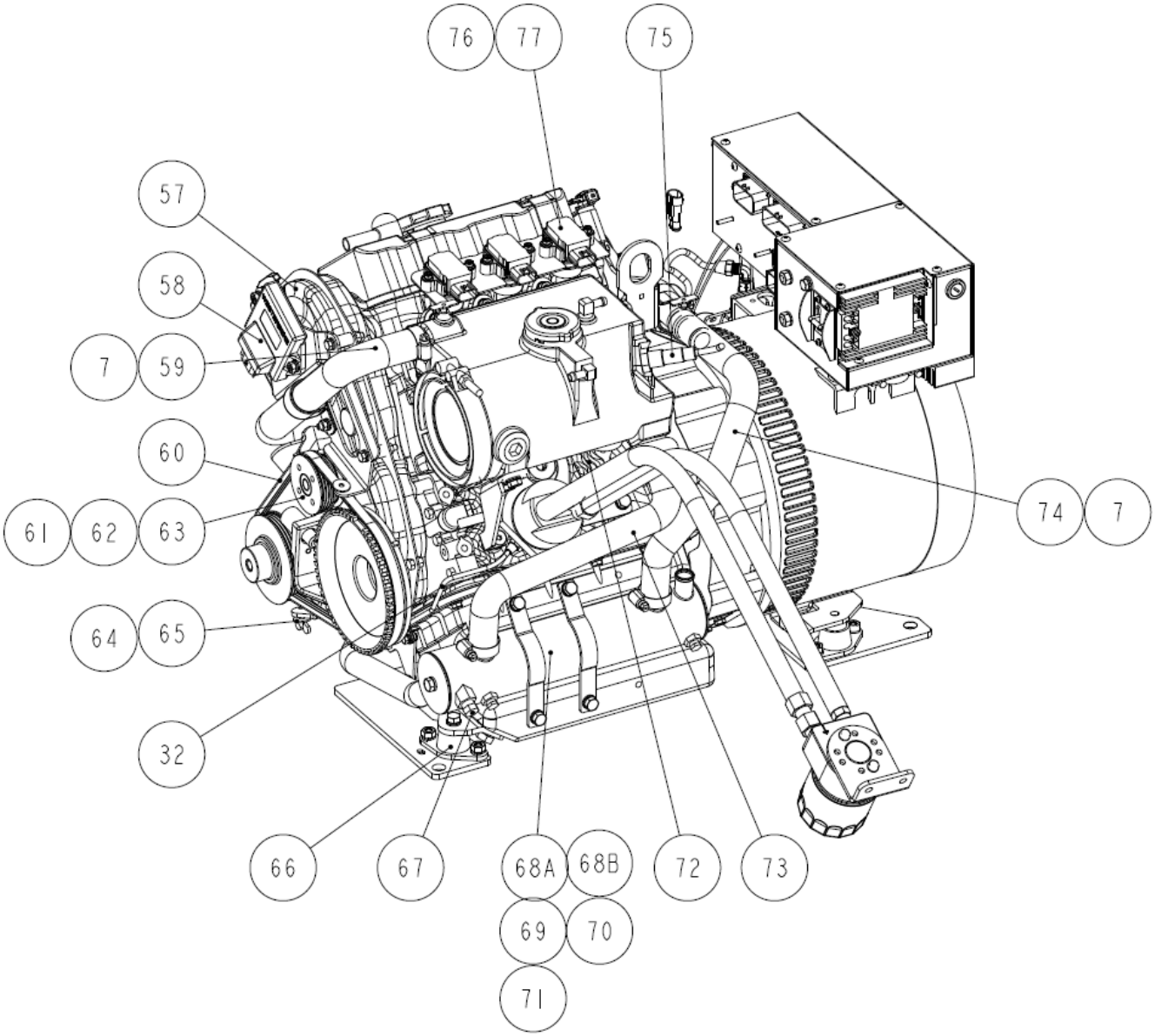

NON-SERVICE SIDE VIEW (LEFT)

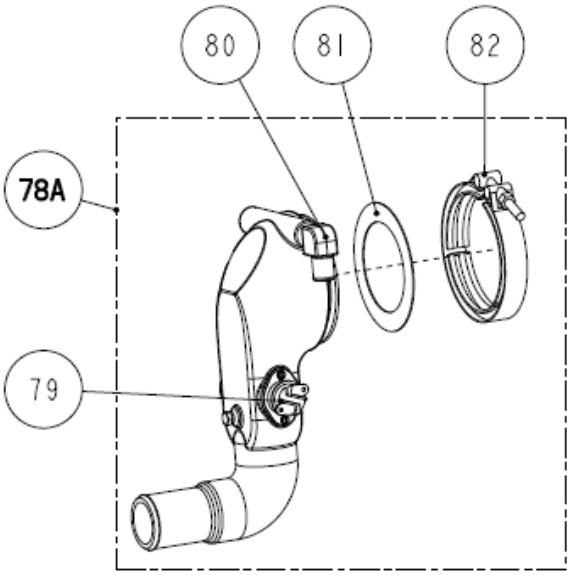

SIDE EXHAUST (SIDEX)

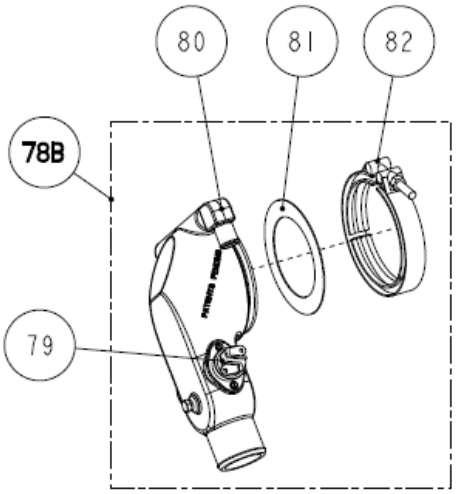

REAR EXHAUST (REARX)

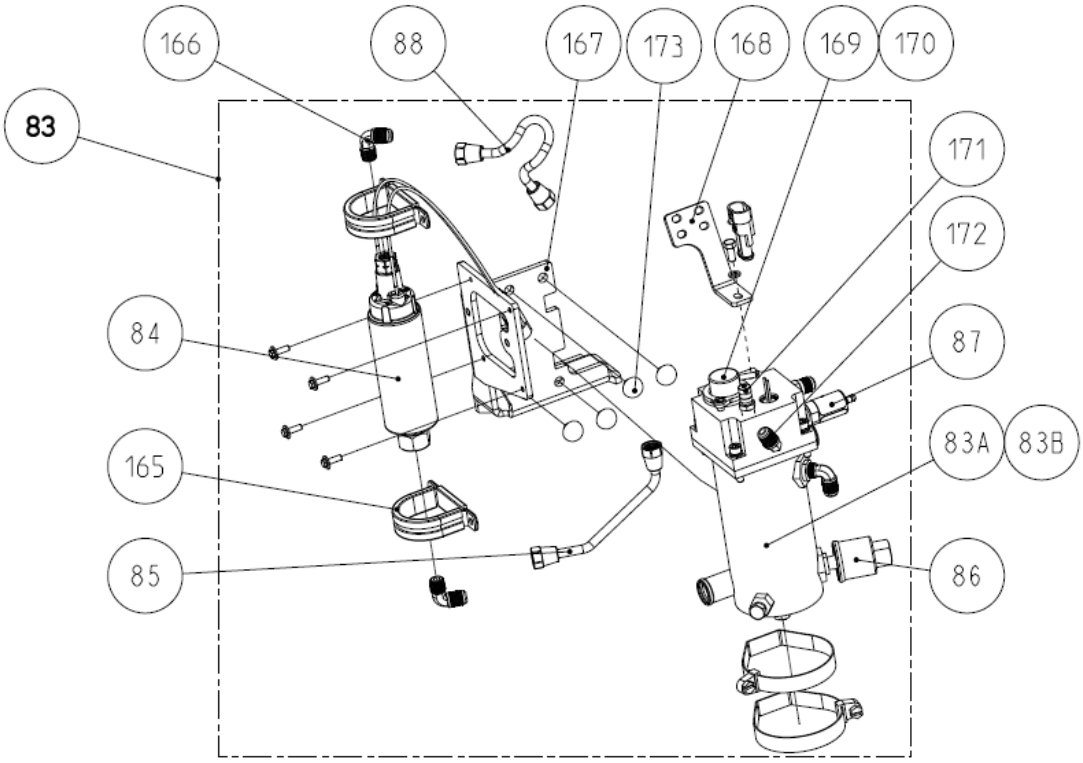

FUEL PUMP MODULE

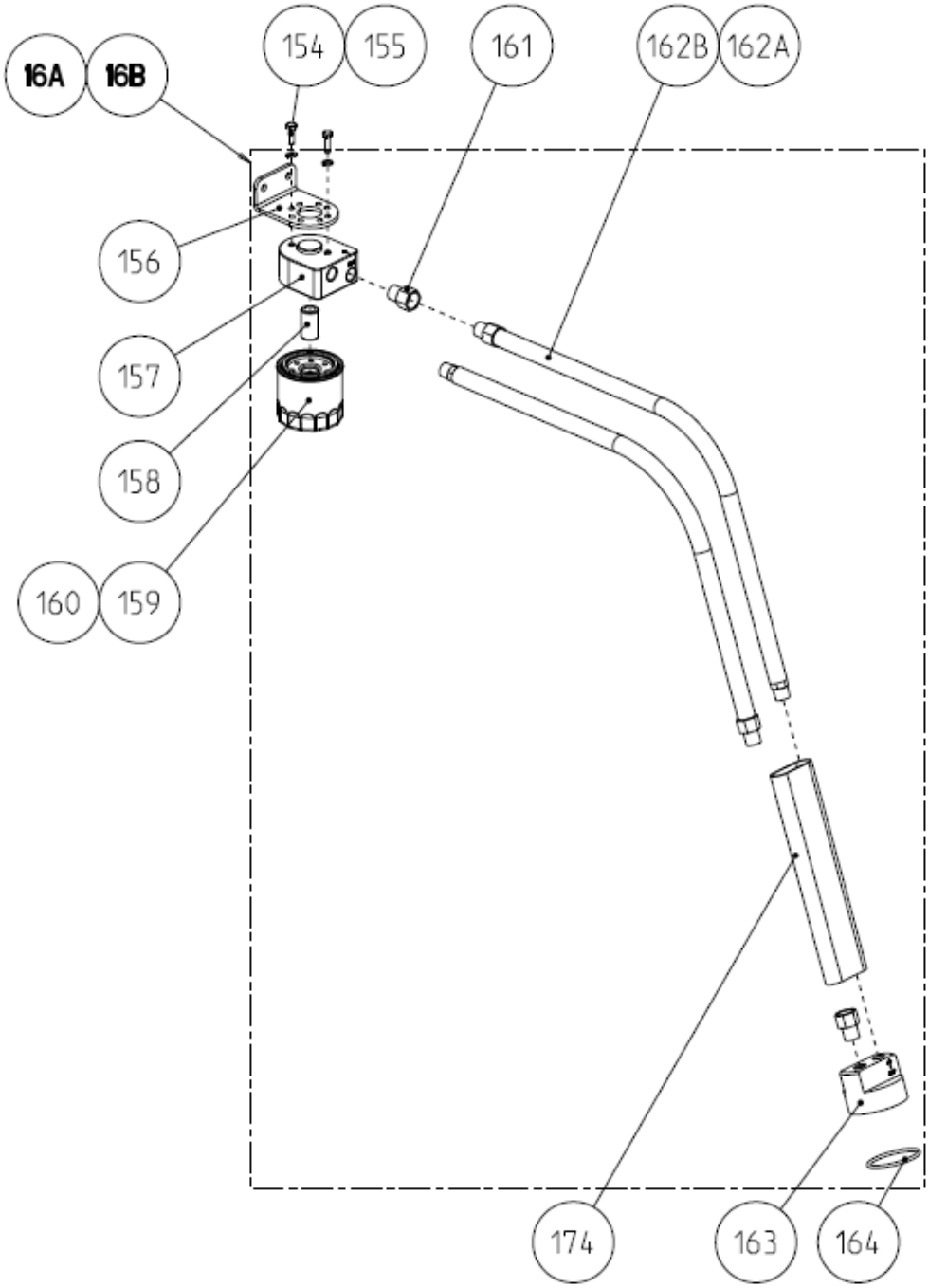

REMOTE OIL FILTER

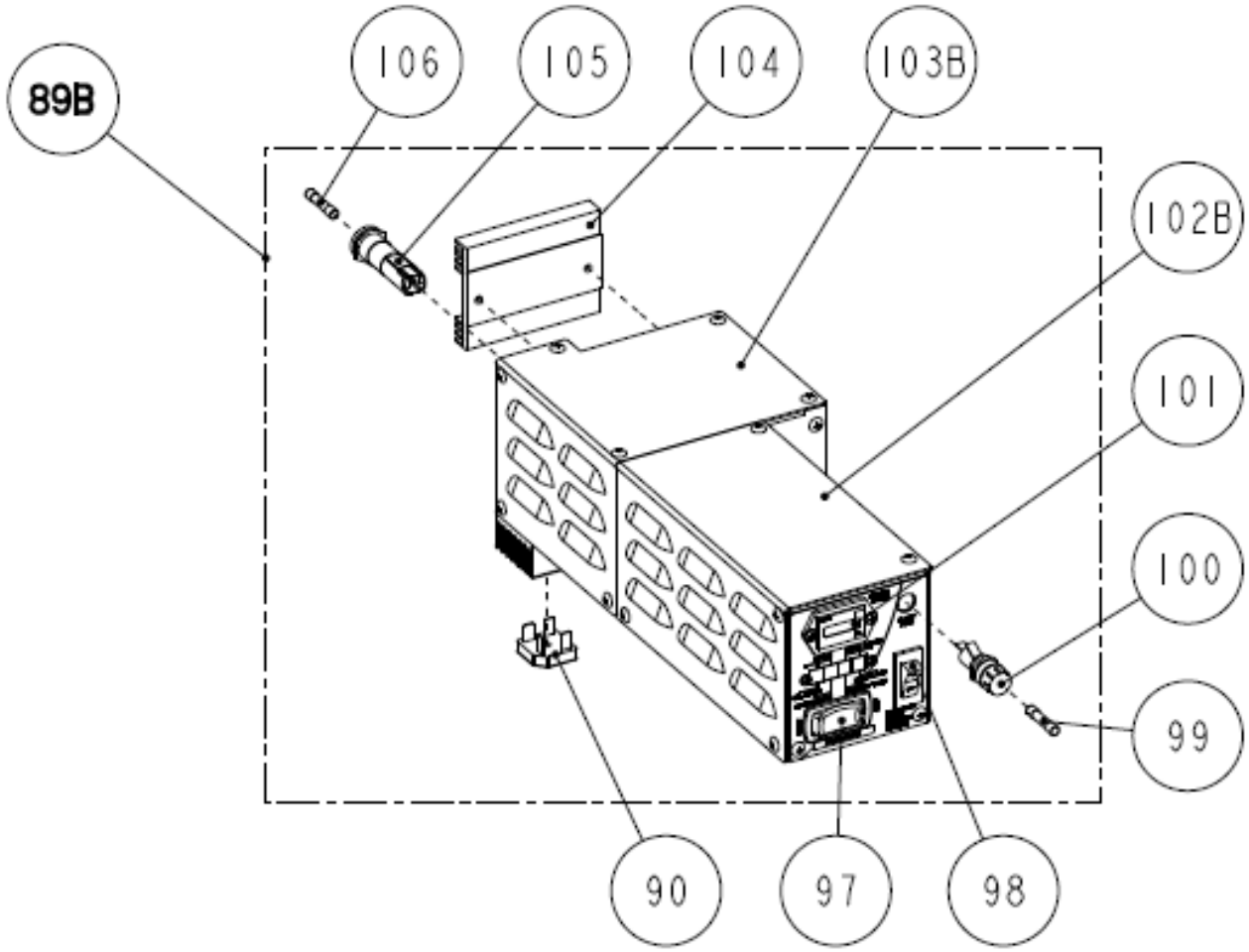

CONTROL PANEL BOX (NON-VENCLOSURE MODELS)

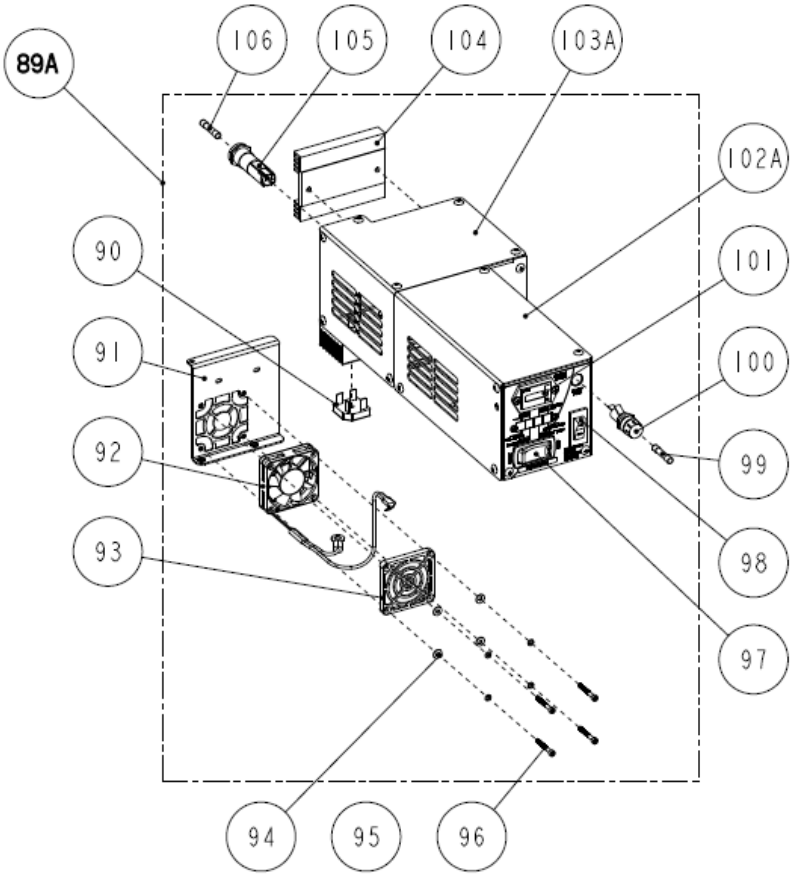

CONTROL PANEL BOX (VENCLOSURE MODELS)

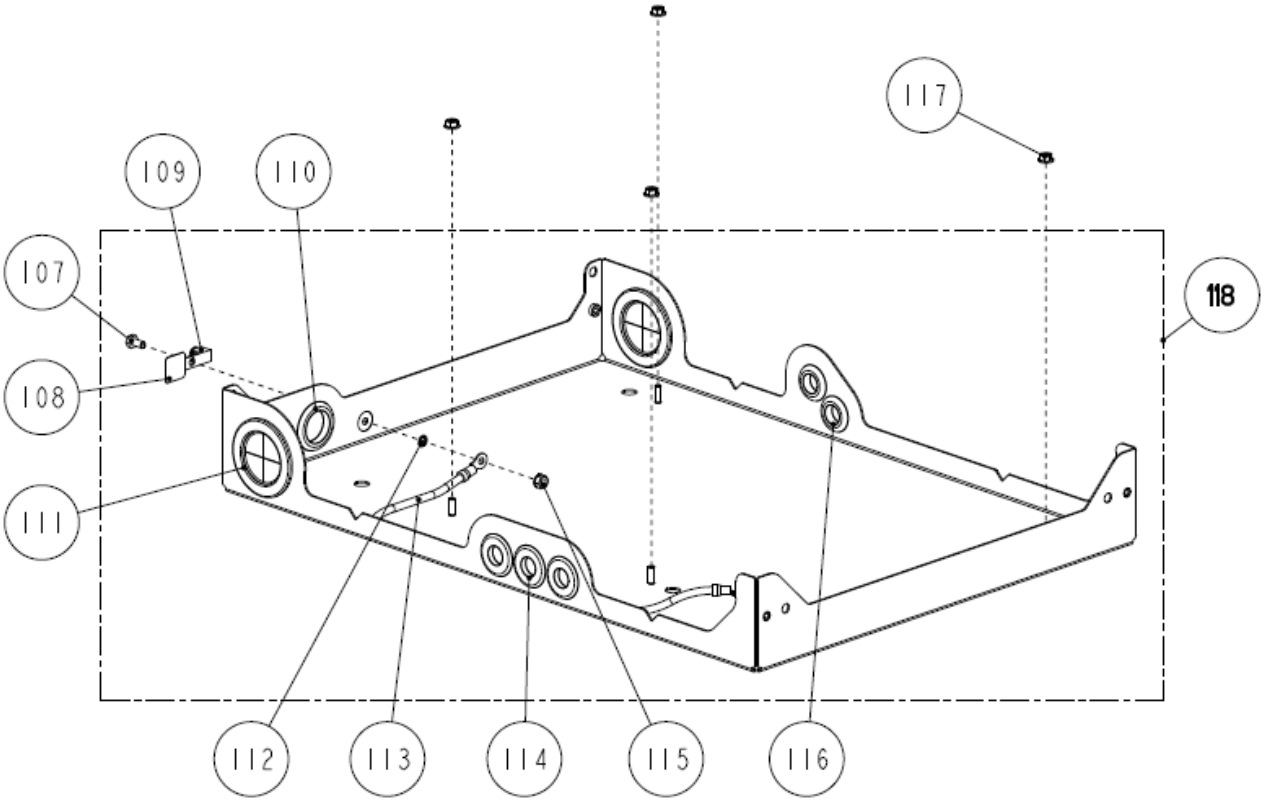

VENCLOSURE BASE ASSY

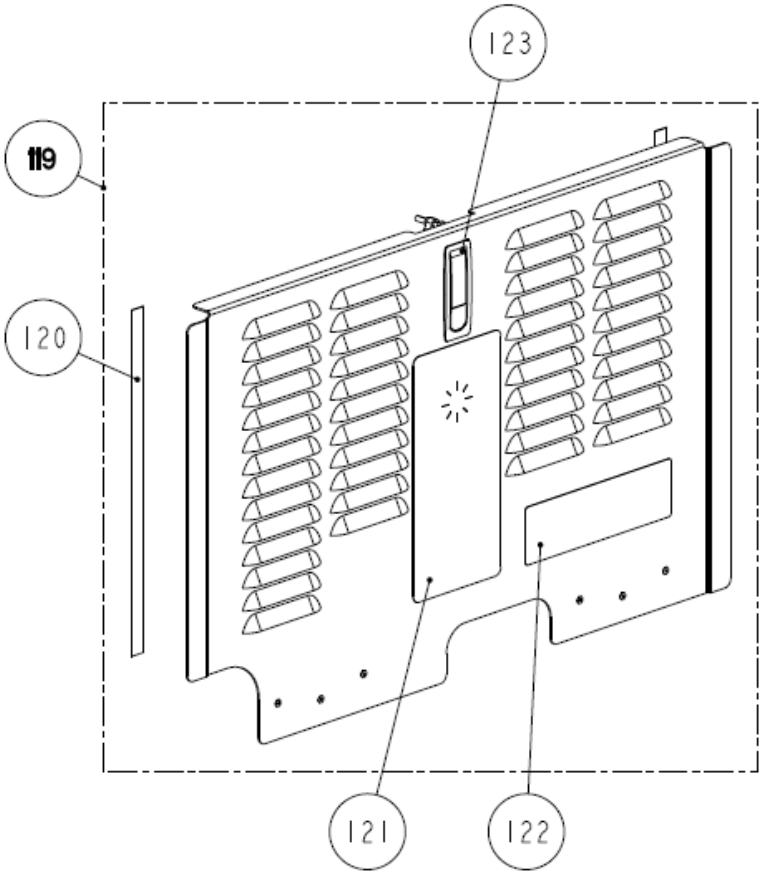

VENCLOSURE SERVICE SIDE PANEL

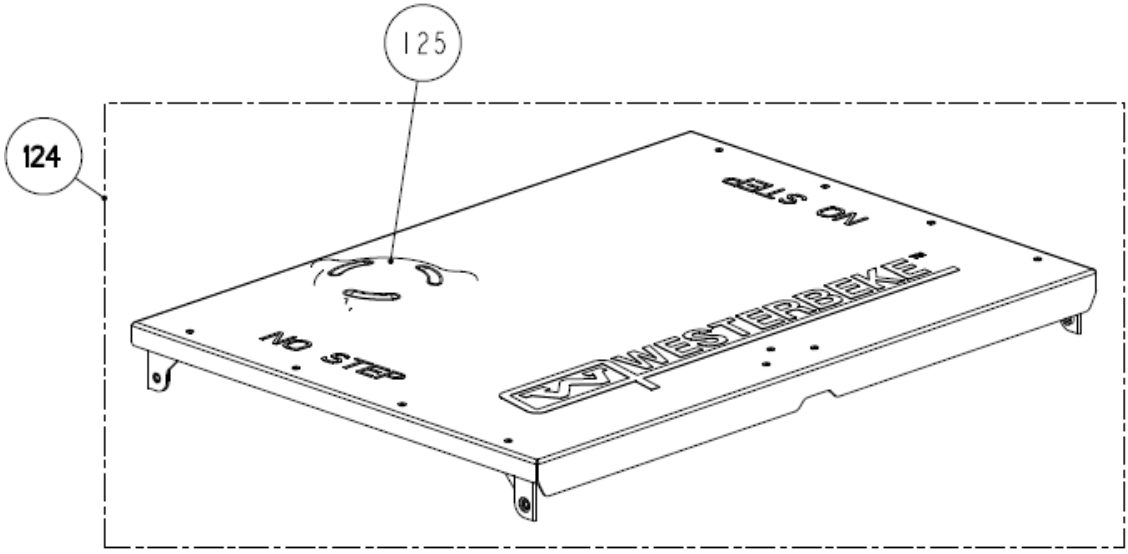

VENCLOSURE TOP PANEL

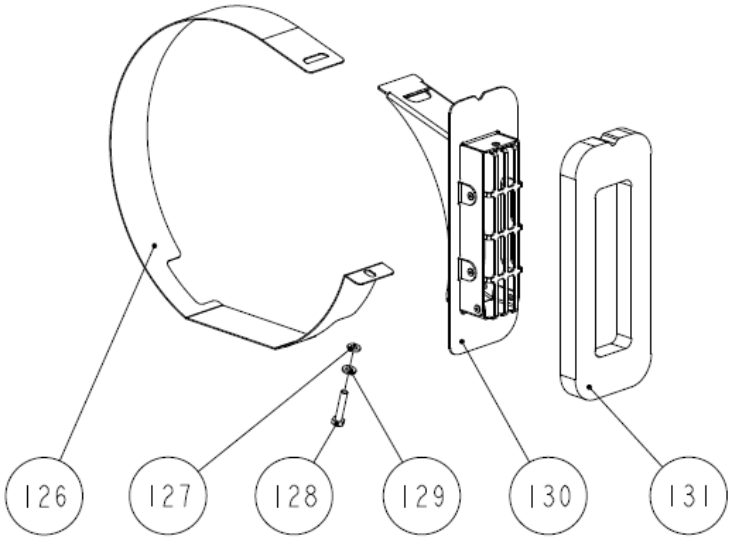

GENERATOR DUCT COMPONENTS (VENCLOSURE MODELS)

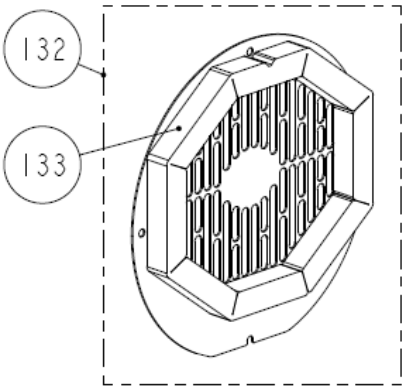

GENERATOR COVER ASSY (VENCLOSURE MODELS)

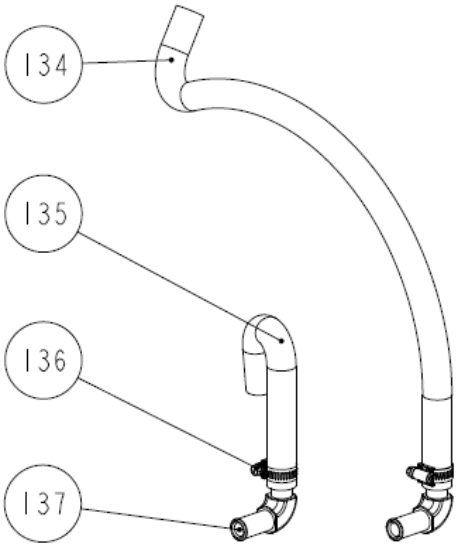

SIPHON BREAK CONNECTION PARTS (VENCLOSURE MODELS)

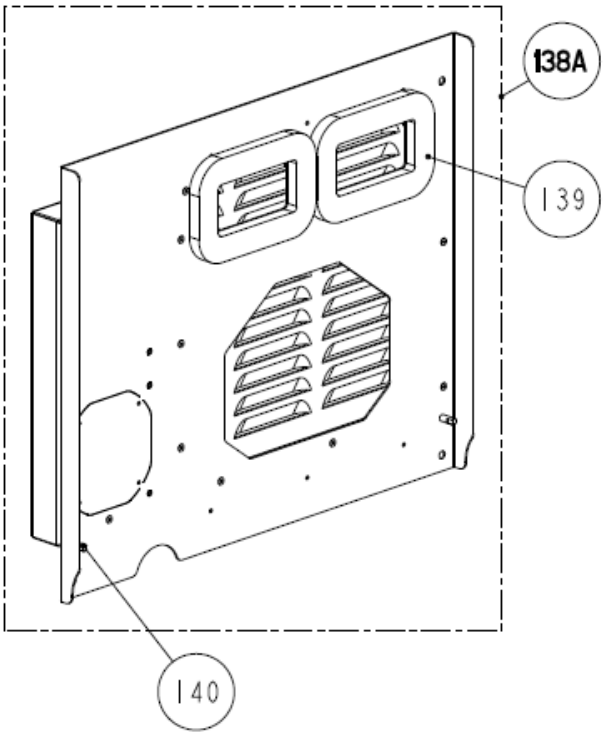

VENCLOSURE GENERATOR PANEL 7.5/6.2 MCGA

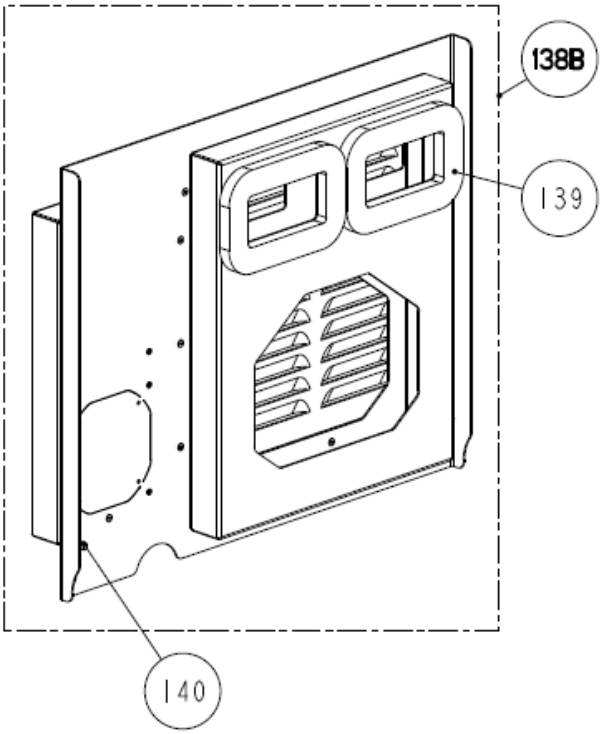

VENCLOSURE GENERATOR PANEL 5.0/4.2 MCGA

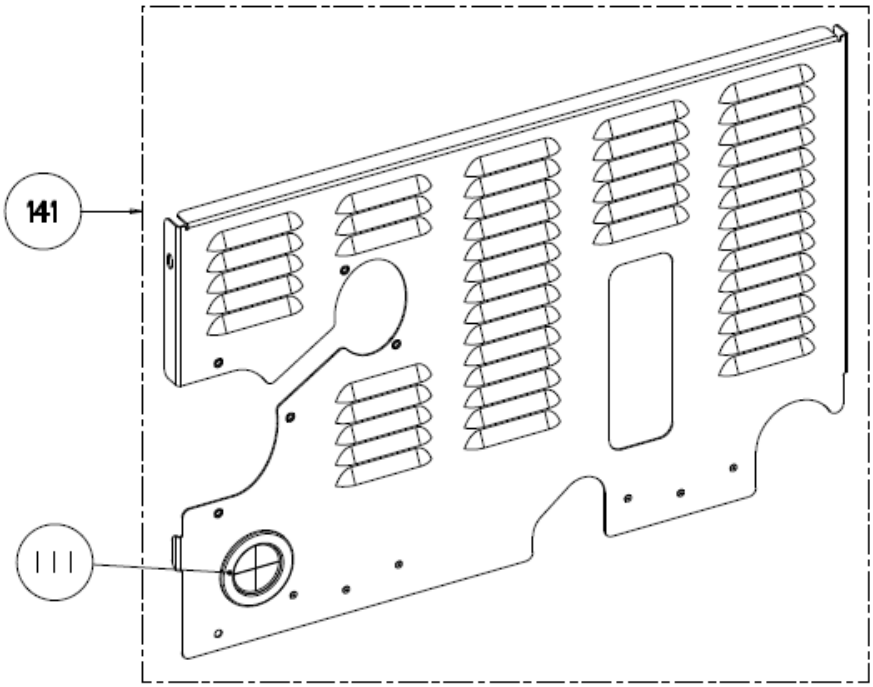

VENCLOSURE REAR PANEL

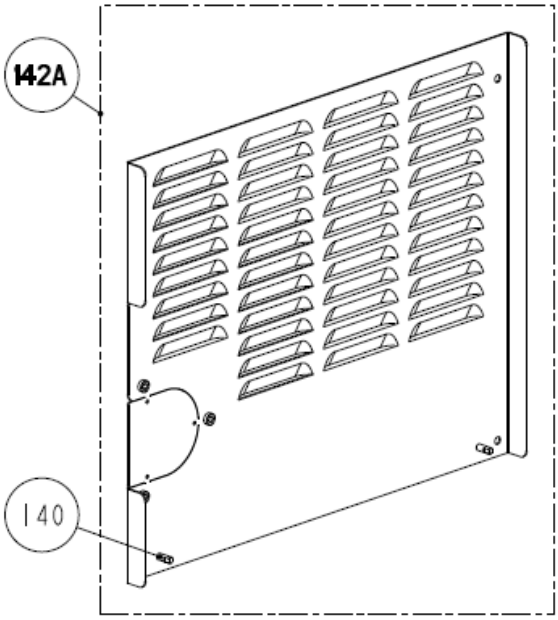

VENCLOSURE BELT SIDE PANEL (REARX)

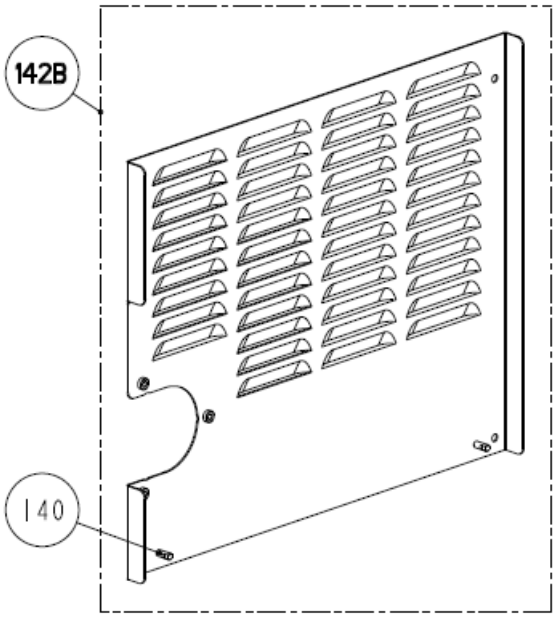

VENCLOSURE BELT SIDE PANEL (SIDEX)

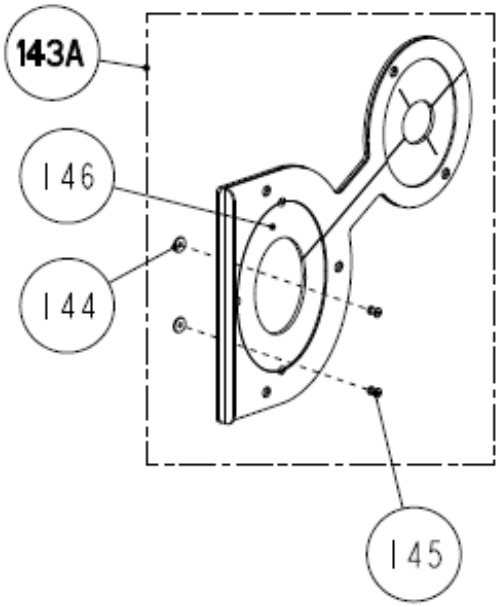

REAR FLANGE ASSY (REARX)

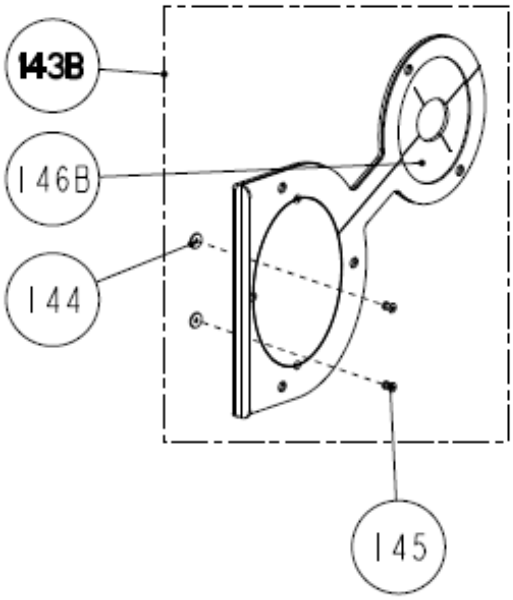

REAR FLANGE ASSY (SIDEX)

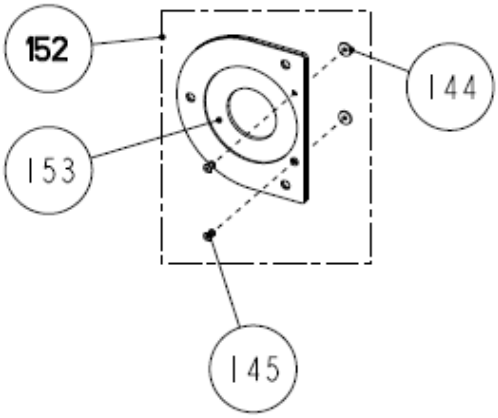

SIDE FLANGE ASSY (SIDEX)

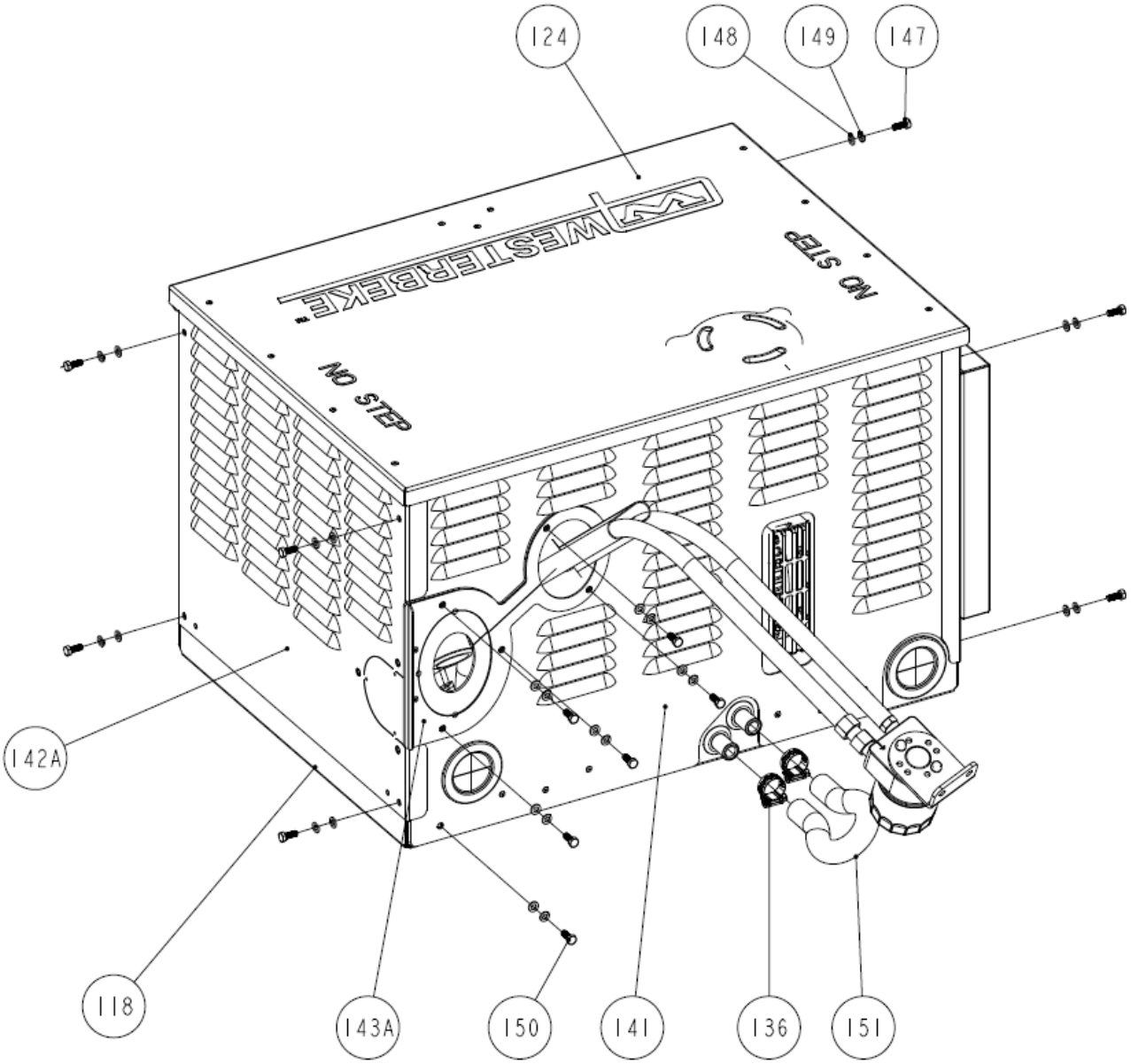

VENCLOSURE PARTS (REARX)

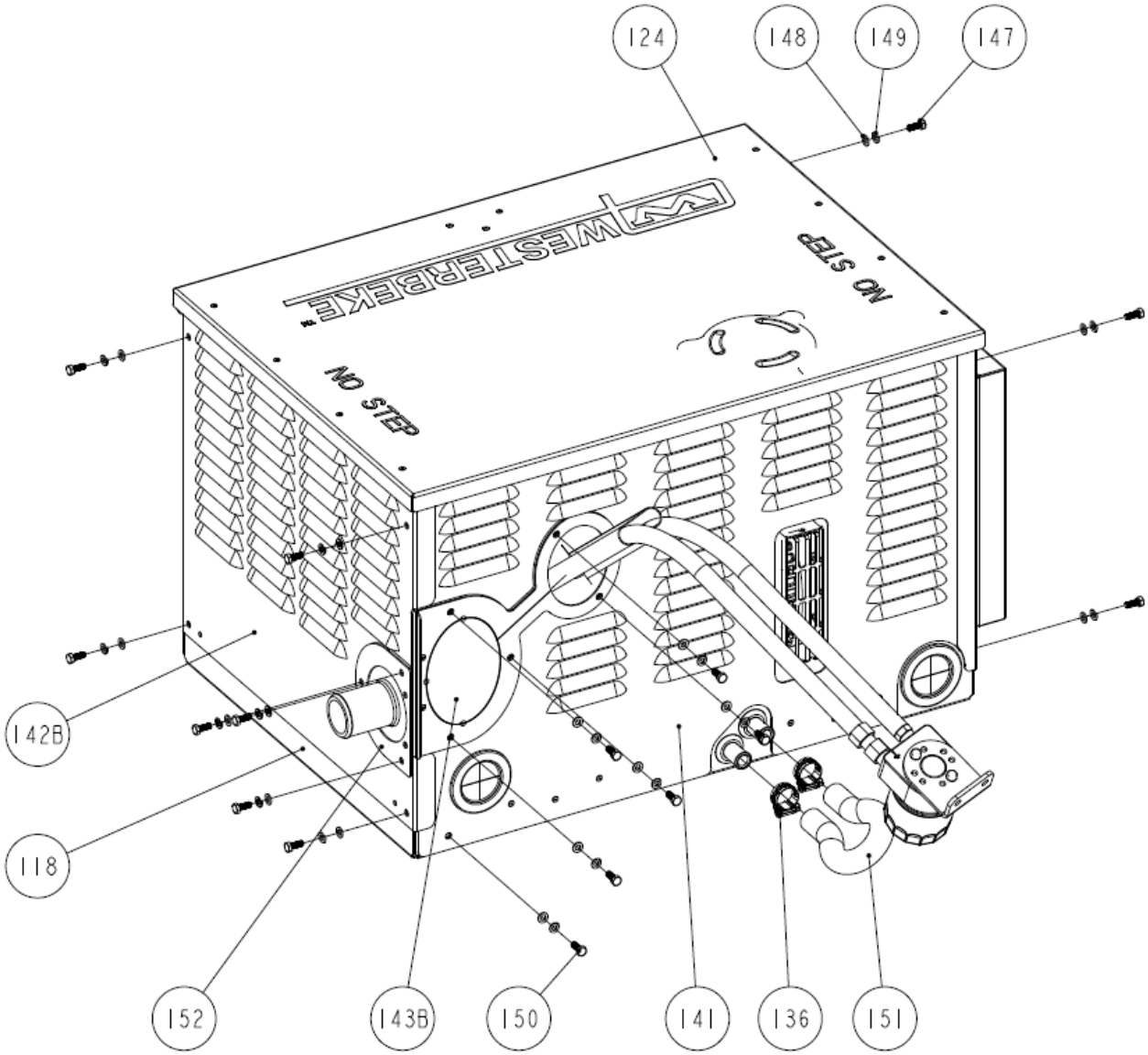

VENCLOSURE PARTS (SIDEX)

PARTS LIST

REF	PART #	PART NAME	NOTES
1	41150	RELAY 30A	
2A	47103	GENERATOR 5.0KW	5.0/4.2 MCGB
2B	49764	GENERATOR 7.0KW	7.5/6.2 MCGB
3	53555	RELAY,TIMING	
4	54568	ARRESTOR,FLAME	
5	57500	THROTTLE BODY ASSY	
6	56623	HOSE,FUEL MODULE	
7	11405	CLAMP,HOSE 16	
8	56669	LINE,FUEL	
9	46800	FILTER,FUEL ASSEMBLY	
10	47006	ELEMENT,FUEL FILTER	
11	56712	LINE,FUEL FILTER TO FUEL RAIL	
12	46309	MOTOR,STARTER	
13	57229	SENDER,OIL PRESS, PIEZO	
14	52799	HARNESS,BATTERY CHGR	
15	48792	FUSE 30A	USED IN 52799 BATTERY CHGR HARNESS
16A	57199	FILTER,REMOTE OIL ASSY 40"	
16B	58048	FILTER,REMOTE OIL ASSY 60"	60" LONG OPTION
17A	36918	FILTER, OIL	
17B	37000	FILTER 12 PACK 36918 OIL	
18	48989	SENSOR,MAP W/TEMP	
19	56544	GUARD,BELT	
20	56728	DIPSTICK	
21	56969	OIL CAP	
22	56886	COVER, ROCKER	
23	56960	GASKET,ROCKER COVER	
24	11471	PETCOCK 1/8NPT	
25	56589	MANIFOLD,EXHAUST	
26	58196	CATALYST ASSY	
27	56640	GASKET,EXH MANIFOLD	
28	24306	CAP,PRESSURE 15PSI	
29	56705	SENSOR,SPEED CAM	
30	56625	HOSE,THERM TO BLEEDER	
31	56696	TEE	
32	58234	LINE, OIL REMOTE MANIFOLD	
33	56622	HOUSING,THERMOSTAT	
34	56584	GASKET,THERM HOUSING	
35	42343	THERMOSTAT	
36	52855	INJECTOR,FUEL	
37	56597	ELBOW,WATER INLET	
38	56706	GASKET,WATER INLET	
39	55624	PUMP,SEA WATER	COMPLETE
40	46734	PULLEY,SEA WATER PUMP	
41	56607	BRACKET,SWP	
42	46622	IMPELLER KIT 46120 PUMP	
43	46624	O-RING,PUMP 46120	
44	34463	SCREW,IMPELLER COVER	
45	55718	KIT,WATER PUMP 55624	
46	37323	SWITCH,OIL PRESS	
47	56624	HOSE,SWP TO XCHGR	
48	56704	SENSOR,SPEED CRANK	OUTER, 58 TOOTH WHEEL

(CONTINUED NEXT PAGE)

(PARTS LIST CONTINUED)

REF	PART #	PART NAME	NOTES
49	57761	SENSOR,SPEED	INNER, 3 TOOTH WHEEL
50	56703	PULLEY,CRANKSHAFT	
51	58225	HARNESS,GENSET TCI	5.0/7.5 MCGB
52	58597	FUSE 15A	USED IN 56547 TCI HARNESS
53	56671	FUSE 0.5A	USED IN 56547 TCI HARNESS
54	58227	HARNESS,GENSET MAIN	5.0/7.5 MCGB
55A	42232	BREAKER,CIRCUIT 20A	5.0/4.2 MCGB
55B	42715	BREAKER,CIRCUIT 35A	7.5/6.2 MCGB
56A	46978	CAPACITOR 31.5MFD	4.2 MCGB
56B	46875	CAPACITOR 25MFD	5.0 MCGB
56C	46639	CAPACITOR 40MFD	6.2 MCGB
56D	49627	CAPACITOR 35MFD	7.5 MCGB
57	57076	BELT, TIMING	
58	56788	TCI MODULE	
59	56695	HOSE,EXH MAN	
60	56633	BELT,POLY-V	
61	56638	PULLEY,FWP	
62	56885	PUMP,FRESH WATER	
63	57077	GASKET, FWP	
64	33228	WINGSCREW	
65	33372	WASHER 0.203ID	
66	55518	ISOLATOR,GEN 170 LB M8	
67	11885	ZINC ANODE	
68A	57101	EXCHANGER,HEAT	
68B	57106	EXCHANGER,HEAT CUNI	COPPER-NICKEL
69	47007	CAP,EXCHANGER	
70	46519	GASKET,EXCHANGER	
71	19321	O-RING 3/8 ID	
72	57074	ENGINE, BLOCK ASSY	
73	56627	HOSE,XCHGR TO EXH MAN	
74	56626	HOSE,BLEEDER TO XCHGR	
75	49077	SENSOR,OXYG WIDE BAND	
76	56702	COIL,IGNITION J3	
77	56754	SPARKPLUG J3	
78A	57067	KIT,WATER INJ ELB SIDEX	SIDEX MODELS
78B	57066	KIT,WATER INJ ELB REARX	REARX MODELS
79	32923	SWITCH,TEMP GEN EXH	
80	42258	ELBOW 3/8NPT x 3/4 HOSE	
81	48985	GASKET,EXHAUST ELBOW	
82	48984	CLAMP,EXHAUST ELBOW	
83A	56761	MODULE,FUEL PUMP ASSY	
83B	57957	MODULE,FUEL ASSY CUNI	COPPER-NICKEL CONSTRUCTION
84	55725	PUMP,FUEL	
85	56763	LINE,FUEL	
86	48076	FILTER,FUEL 80MIC	
87	54500	VALVE,DIVERTER	
88	56773	LINE,FUEL	

(PARTS LIST CONTINUED)

REF	PART #	PART NAME	NOTES
89A	55540	PANEL,GENSET CTL	NON-VENCLOSURE MODELS
89B	57423	PANEL, GENSET -BAT	NON-VENCLOSURE MODELS W/O BAT CHARGER
89C	56880	PANEL,GENSET CTL VEN	VENCLOSURE MODELS W/ BAT. CHARGER
89D	56881	PANEL,GENSET VEN -BAT	VENCLOSURE MODELS W/O BAT. CHARGER
90	43649	RECTIFIER 50A	NOT USED ON ALL MODELS
91	56809	DIVIDER,CTR PANEL	
92	56847	FAN ASSY,PANEL	
93	56849	GUARD,56874 FAN	
94	56850	WASHER	
95	56851	LOCKWASHER	
96	56852	SCREW	
97	49200	SWITCH,ROCKER	
98	52732	BREAKER,CIRCUIT 20A	
99	33769	FUSE MTH 8A	
100	43747	HOLDER,FUSE	
101	43835	METER,HOUR	
102A	56783	COVER,CTL PANEL DC	VENCLOSURE MODELS
102B	49142	COVER,CONTROL BOX	NON-VENCLOSURE MODELS
103A	56812	COVER,CTL PANEL AC	VENCLOSURE MODELS
103B	49141	COVER,CONTROL BOX	NON-VENCLOSURE MODELS
104	52800	CHARGER,BATTERY	NOT USED ON ALL MODELS
105	43828	HOLDER,FUSE-BODY	NOT USED ON ALL MODELS
106	43634	FUSE MDA 30A	NOT USED ON ALL MODELS
107	31501	CAPSCREW	
108	47082	LABEL,GROUND SYMBOL	
109	49543	TERMINAL,GROUND LUG	
110	56836	GROMMET, 1-1/4 HOLE	
111	39498	BUSHING 2.50 HOLE	
112	231907	LOCKWASHER	
113	52968	WIRE,GROUND	
114	56835	GROMMET 1-1/4ID	
115	200120	NUT	
116	56834	GROMMET 1-1/16ID	
117	57036	NUT M 6x1	
118	57082	BASE ASSY	
119	56870	PANEL,SVC	
120	49548	GASKET,PANEL EDGE	
121	56856	LABEL,FIREPORT WARNING	
122	56872	LABEL,LOGO EFI LOW-CO	
123	56843	LATCH	
124	56867	PANEL,TOP	
125	56735	PLUG RUBBER	
126	56760	STRAP,DUCT GEN EXHAUST	
127	31784	WASHER	
128	13590	CAPSCREW	
129	31783	LOCKWASHER	
130	56871	DUCT ASSY,GEN EXHAUST	
131	56767	SEAL,DUCT	
132	56920	COVER ASSY,ALTERNATOR	
133	56778	SEAL,GEN INLET	
134	56737	HOSE,VENCL TO EXH ELBOW	

(CONTINUED NEXT PAGE)

(PARTS LIST CONTINUED)

REF	PART #	PART NAME	NOTES
135	56736	HOSE,HEAT EXGR TO VENCL	
136	301083	CLAMP,HOSE 10	
137	56733	ELBOW	
138A	56863	PANEL,GEN	7.5/6.2 MCGB
138B	56864	PANEL,GEN	5.0/4.2 MCGB
139	56813	SEAL,CONTROL PANEL	
140	56815	ALIGNMENT PIN	
141	58249	PANEL,REAR MCGB	
142A	56865	PANEL,BELT	REARX MODELS
142B	56866	PANEL,BELT	SIDEX MODELS
143A	58248	REAR FLANGE ASSY	REARX MODELS
143B	58213	REAR FLANGE ASSY	SIDEX MODELS
144	56839	WASHER,FLAT	
145	43094	RIVET,POP 1/8DIA	
146	58212	SEAL,EXH HOSE	REARX MODELS
147	56842	CAPSCREW	
148	55812	WASHER	
149	55847	LOCKWASHER	
150	56928	CAPSCREW	
151	56793	HOSE,SIPHON BREAK	
152	58242	SIDE FLANGE ASSY	SIDEX MODELS
153	58243	SEAL, SIDE FLANGE	SIDEX MODELS
154	46270	M6X20 CAPSCREW	
155	55847	M6 LOCKWASHER	
156	57012	BRACKET, OIL REMOTE	
157	57011	ADAPTER, FILTER	
158	34663	NIPPLE, OIL FILTER	
161	13348	CONNECTOR, MALE, OIL LINE	
162A	11925	HOSE, OIL	40" LONG
162B	53973	HOSE,OIL 60 LG	60" LONG
163	57013	ADAPTER, ENGINE	
164	32148	O-RING	
165	57825	CLAMP, FUEL PUMP BODY	
166	55511	ELBOW,MALE	
167	56762	BRACKET,FUEL MODULE	
168	55637	BRACKET,FUEL MODULE SUPPORT	
169	54769	REGULATOR,FUEL	
170	54770	RETAINER,FUEL REGULATOR	
171	42738	VALVE,FUEL SYSTEM TEST	
172	55510	CONNECTOR,MALE	
173	55534	BUMPER,RUBBER	
174	58356	SLEEVE, HOSE	

OPTIONAL PARTS LIST (NOT SHOWN IN ILLUSTRATIONS)

REF	PART #	PART NAME	NOTES
OP1	54928	PANEL,REMOTE CONTROL	START/STOP WITH LED (4" X 4")
OP2	55345	PANEL,REMOTE ST-STOP	START/STOP ONLY (2.6" X 3.2")
OP3	57100	GASKET SET, UPPER	
OP4	56957	GASKET SET,COMPLETE	
OP5	56910	SPARE PARTS KIT A	CONTAINS ITEMS: 67,99,17A,106,10,86,15,60,52,53 & 77
OP6	56911	SPARE PARTS KIT B	CONTAINS ITEMS:67,99,17A,35,106,90,42-44,10,86,15,60,52,53,77,OP3 &OP4
OP7	56912	HOSE KIT	CONTAINS ITEMS: 7,47,30,74,73,85,136,55537 & 56990
OP8	56556	MANUAL,OPERATOR	
OP9	58266	DGGENSET WIRE	WIRING DIAGRAM SCHEMATIC
OP10	54931	CABLE,EXTENSION 15'	15FT EXTENSION FOR 54928/55345
OP11	54932	CABLE,EXTENSION 30'	30FT EXTENSION FOR 54928/55345
OP12	57261	CABLE,EXTENSION 15' W/ LOOM	15FT EXTENSION FOR 54928/55345
OP13	57260	CABLE,EXTENSION 30' W/ LOOM	30FT EXTENSION FOR 54928/55346
OP14	57854	CABLE,EXTENSION 15' SHIELDED	15FT EXTENSION FOR 54928/55347
OP15	57855	CABLE,EXTENSION 30' SHIELDED	30FT EXTENSION FOR 54928/55348
OP16	57856	CABLE,EXTENSION 50' SHIELDED	50FT EXTENSION FOR 54928/55349
OP17	57857	CABLE,EXTENSION 75' SHIELDED	75FT EXTENSION FOR 54928/55350
OP18	57858	CABLE,EXTENSION 100' SHIELDED	100FT EXTENSION FOR 54928/55351
OP19	56264	HARNESS KIT, AUX RELAY	HARNESS FOR POWERING EXTERNAL RELAY